5524 PCI
100Base-T Adapter
Users Guide

5524 PCI
100Base-T Adapter
Users Guide

Document No. UG05524-000, REVA

Release Date: July 14, 1997

Copyright Notice

© 1996 by Interphase Corporation. All rights reserved.

Printed in the United States of America, 1997.

This manual is licensed by Interphase to the user for internal use only and is protected by copyright. The user is authorized to download and print a copy of this manual if the user has purchased one or more of the Interphase adapters described herein. All copies of this manual shall include the copyright notice contained herein. No part of this manual, whether modified or not, may be incorporated into user's documentation without prior written approval of

Interphase Corporation
13800 Senlac
Dallas, Texas 75234

Phone: (214) 654-5000
Fax: (214) 654-5500

Disclaimer

Information in this manual supersedes any preliminary specifications, preliminary data sheets, and prior versions of this manual. While every effort has been made to ensure the accuracy of this manual, Interphase Corporation assumes no liability resulting from omissions, or from the use of information obtained from this manual. Interphase Corporation reserves the right to revise this manual without obligation to notify any person of such revision. Information available after the printing of this manual will be in one or more Read Me First documents. Each product shipment includes all current Read Me First documents. All current Read Me First documents are also available on our web site.

Trademark Acknowledgments

Interphase® and Syncard® are registered trademarks and CellView™, (i)chip™, ADSLWatch™, ADSLEye™, SynWatch™, SynEye™, and FibreView™ are trademarks of Interphase Corporation.

Microsoft®, MS-DOS®, Windows®, and Windows NT® are registered trademarks of Microsoft Corp.

Novell® and NetWare® are registered trademarks of Novell, Inc.

Solaris® and NFS® are registered trademarks and SunOS™ and ONC™ are trademarks of Sun Microsystems, Inc. Sun is a trademark or registered trademark of Sun Microsystems, Inc.

SPARC® is a registered trademark of SPARC International, Inc. SPARCstation™ and UltraSPARC™ are trademarks of SPARC International, Inc., licensed exclusively to Sun Microsystems, Inc.

LattisCell™, EtherCell™, Bay Networks™, and SAHI™ are trademarks of Bay Networks, Inc.

UNIX® is a registered trademark in the United States and other countries, licensed exclusively through X/Open Company Ltd.

IBM® and OS/2® are registered trademarks and AIX™ and PowerPC™ are trademarks of International Business Machines Corporation.

HP-UX® is a registered trademark and Tachyon™ and Precision Bus™ are trademarks of Hewlett-Packard Company.

Intel® and Pentium® are registered trademarks of Intel Corporation.

TI® is a registered trademark of Texas Instruments.

Compu-shield® is a registered trademark of Stewart Connectors Systems, Inc.

Tundra® is a registered trademark and Universe™ is a trademark of Tundra Semiconductor Corporation.

Ethernet® is a registered trademark of Xerox Corporation.

DG/UX® and AViiON® are registered trademarks of Data General Corporation.

Apple® and Power Macintosh® are registered trademarks and Macintosh™, MacOS™, Mac™, and AppleTalk™ are trademarks of Apple Computer, Inc.

NCR® is a registered trademark of NCR Corporation.

Silicon Graphics® is a registered trademark and SGI™, Indigo™, Indy™, Indigo^2™, IRIX™, IRIS™, IRIS Indigo™, Challenge™, and Challenge M™ are trademarks of Silicon Graphics, Inc.

ALPHA™ is a trademark of Digital Equipment Corporation.

Gadzoox™ is a trademark of Gadzoox Microsystems, Inc.

Seagate™ and Barracuda™ are trademarks of Seagate Technology, Inc.

ST® is a registered trademark of AT&T.

SCO, The Santa Cruz Operation, SCO OpenServer, and UnixWare are trademarks or registered trademarks of The Santa Cruz Operation, Inc.

SUPERNET™ is a trademark of Advanced Micro Devices, Inc.

Cisco® is a registered trademark and Cisco Systems™ is a trademark of Cisco Systems, Inc.

Adobe® and Acrobat® are registered trademarks of Adobe Systems Incorporated.

Assistance

Product Purchased from Reseller

Contact the reseller or distributor if

- You need ordering, service or any technical assistance.
- You received a damaged, incomplete or incorrect product.

Product Purchased Directly from Interphase Corporation

Contact Interphase Corporation directly for assistance with this, or any other Interphase Corporation product. Please have your purchase order and serial numbers ready.

Customer Support

United States:	Telephone:	(214) 654-5555
	Fax:	(214) 654-5500
	E-Mail:	intouch@iphase.com

United Kingdom:	Telephone:	+ 44 (0) 1869-321222
	Fax:	+ 44 (0) 1869-247720
France:	Telephone:	+ 33 (0) 1 41 15 44 00
	Fax:	+ 33 (0) 1 41 15 12 13
Asia/Pacific Rim:	Telephone:	+ 81 35423 6513
	Fax:	+ 81 3 5423 6511

World Wide Web

http://www.iphase.com

Anonymous FTP Server

ftp.iphase.com

Safety Precautions

The following general safety precautions must be observed during all phases of operation of this equipment. Failure to comply with these precautions or with specific warnings elsewhere in this manual violates safety standards of design, manufacture, and intended use of the equipment. Interphase Corporation assumes no liability for the user's failure to comply with these requirements. You, as the user of the product, must observe all stated warnings and safety precautions in order to safely operate the equipment in your environment.

Do Not Substitute Parts or Modify Equipment

Because of the danger of introducing additional hazards, do not install substitute parts or perform any unauthorized modification of the equipment. Contact your local Interphase representative for service and repair to ensure that safety features are maintained.

Ground the Instrument

To minimize shock hazard, the equipment chassis and enclosure must be connected to an electrical ground. The power cable must either be plugged into an approved three-contact electrical outlet or used with a three-contact to two-contact adapter, with the grounding wire (green) firmly connected to an electrical ground (safety ground) at the power outlet.

Do Not Operate in an Explosive Atmosphere

Do not operate the equipment in the presence of flammable gases or fumes. Operation of any electrical equipment in such an environment constitutes a definite safety hazard.

Keep away from Live Circuits

Do not install or replace the component with power cable connected. Under certain conditions, dangerous voltages may exist even with the power cable removed. To avoid injuries, always disconnect power and discharge circuits before touching them.

Observe Dangerous Procedure Warnings

Warnings precede potentially dangerous procedures throughout this manual. Instructions contained in the warnings must be followed. You should also employ all other safety precautions which you deem necessary for the operation of the equipment in your operating environment.

WARNING

This equipment generates, uses, and can radiate electromagnetic energy. It may cause or be susceptible to electromagnetic interference (EMI) if not installed and used in a cabinet with adequate EMI protection.

Limited Warranty Policy

Interphase Corporation (“Seller”) warrants that (i) the hardware provided to Buyer (“Products”) shall, at the F.O.B. point, be free from defects in materials and workmanship for a period of one (1) year from the date of shipment to Buyer; (ii) the software and/or firmware associated with or embedded in the Products shall comply with the applicable specifications for a period of six (6) months from the date of shipment to Buyer; and (iii) its services will, when performed, be of good quality. Defective and nonconforming Products and software must be held for Seller’s inspection and returned at Seller’s request, freight prepaid, to the original F.O.B. point.

Upon Buyer’s submission of a claim in accordance with Seller’s Return and Repair Policy, Seller will, at its option either (i) repair or replace the nonconforming Product; (ii) correct or replace the software/firmware; (iii) rework the nonconforming services; or (iv) refund an equitable portion of the purchase price attributable to such nonconforming Products, software, or services. Seller shall not be liable for the cost of removal or installation of products or any unauthorized warranty work, nor shall Seller be responsible for any transportation costs, unless expressly authorized in writing by Seller. This warranty does not cover damage to the Product resulting from accident, disaster, misuse, negligence, improper maintenance, or modification or repair of the Product other than by Seller. Any Products or software replaced by Seller will become the property of Seller.

REMEDIES AND EXCLUSIONS. THE SOLE LIABILITY OF SELLER AND BUYER’S SOLE REMEDY FOR BREACH OF THESE WARRANTIES SHALL BE LIMITED TO REPAIR OR REPLACEMENT OF THE PRODUCTS OR CORRECTION OF THAT PART OF THE SOFTWARE, WHICH FAILS TO CONFORM TO THESE WARRANTIES. EXCEPT AS EXPRESSLY STATED HEREIN, AND EXCEPT AS TO TITLE, THERE ARE NO OTHER WARRANTIES, EXPRESS OR IMPLIED, INCLUDING WARRANTIES OF MERCHANTABILITY OR FITNESS FOR ANY PARTICULAR PURPOSE, IN CONNECTION WITH OR ARISING OUT OF ANY PRODUCT OR SOFTWARE PROVIDED TO BUYER.

IN NO EVENT SHALL SELLER HAVE ANY LIABILITY FOR INDIRECT, INCIDENTAL, SPECIAL OR CONSEQUENTIAL DAMAGES, HOWEVER CAUSED AND ON ANY THEORY OF LIABILITY, ARISING OUT OF THESE WARRANTIES, INCLUDING BUT NOT LIMITED TO LOSS OF ANTICIPATED PROFITS, LOSS OF DATA, USE OR GOODWILL, EVEN IF ADVISED OF THE POSSIBILITY OF SUCH DAMAGES.

IC-199, 1/97

THIS MANUAL IS PROVIDED “AS IS.” INTERPHASE DISCLAIMS ALL WARRANTIES, EXPRESS OR IMPLIED, INCLUDING THOSE OF MERCHANTABILITY AND FITNESS FOR A PARTICULAR PURPOSE OR ARISING FROM A COURSE OF DEALING, USAGE, OR TRADE PRACTICE.

IN NO EVENT SHALL INTERPHASE BE LIABLE FOR ANY INDIRECT, SPECIAL, CONSEQUENTIAL, OR INCIDENTAL DAMAGES, INCLUDING, WITHOUT LIMITATION, LOST PROFITS OR LOSS OR DAMAGE TO DATA ARISING OUT OF THE USE OR INABILITY TO USE THIS MANUAL, EVEN IF ADVISED OF THE POSSIBILITY OF SUCH DAMAGES.

5524 FCC Regulatory Compliance

Tested To Comply With FCC Standards

This device complies with Part 15 of the FCC Rules. Operation is subject to the following two conditions:

- This device may not cause harmful interference.
- This device must accept any interference received, including interference that may cause undesired operation.

Radio Frequency Interference Statement

This equipment has been tested and found to comply with the limits for a Class B digital device, pursuant to Part 15, Subpart B of the FCC Rules. This equipment generates, uses, and can radiate radio frequency energy. If not installed and used in accordance with the instructions, it may cause interference to radio communications.

The limits are designed to provide reasonable protection against such interference in a residential situation. However, there is no guarantee that interference will not occur in a particular installation. If this equipment does cause interference to radio or television reception, which can be determined by turning the equipment on and off, the user is encouraged to try to correct the interference by one or more of the following measures:

- Reorient or relocate the receiving antenna of the affected radio or television.
- Increase the separation between the equipment and the affected receiver.
- Connect the equipment and the affected receiver to power outlets on separate circuits.
- Consult the radio/TV dealer or an experienced radio/TV technician for help.

Modifications

Changes or modifications not expressly approved by Interphase Corporation could void the user's authority to operate the equipment.

Declaration of Conformity

(according to ISO/IEC Guide 22 and EN 45014)

Manufacturer's Name:	Interphase Corporation
Manufacturer's Address and Phone Number:	13800 Senlac Dallas, Texas 75234 U.S.A. 214/654-5000

declares, that the product:

Product Name: PCI 100Mb TX

Model Number: 5524-3-B

conforms to the following Standards:

Safety:	EN 60950:1988 + A1, A2
EMC:	EN 55022:1988 class B EN 50082-1 Part 1 1992

Supplementary Information:

This product complies with the requirements of the **Low Voltage Directive 73/23/EEC** and the **EMC directive 89/336/EEC**.

Dallas, December 9, 1996

Mike Jobe, Quality Manager

European Contact:

Interphase International
Astral House, Granville Way, Bicester, Oxon, England OX6 0JT
Phone: +44 (0) 1869-321222; Fax:+44 (0) 1869-247720

Contents

List of Figures iii

Conventions v

Icon Conventions v
Text Conventions vi

CHAPTER 1 Introduction

5524 Features 1
System Requirements 1

CHAPTER 2 5524 100Base-T Adapter Installation

Overview 3
Installation Prerequisites 4
Cable and Connector Requirements 4
Cable Requirements 5
10-Mbps Twisted-Pair Connector 5
100-Mbps Twisted-Pair Connector 6
Installing the 5524 100Base-T Adapter 6

CHAPTER 3 HP-UX 10.x Driver Installation

Overview 9
Installation Prerequisites 9
Loading the HP-UX 10.x Driver 10
Configuring the Network Interface 13
Verifying the Interface 13

CHAPTER 4 Troubleshooting

Overview 15
LEDs 15
Locations 15
Meanings 16
Problems and Solutions 16

APPENDIX A 5524 Specifications

Hardware 19
Cables and Connectors 19
Standards Compliance 20
Operating Environment 20
Storage Environment 20

APPENDIX B PCI/PMC Technology Overview

PCI/PMC Technology 21

APPENDIX C 100Base-T Technology Overview

Overview 23
100Base-TX 23
100Base-T4 23
Auto-Negotiation 25
World-Wide Web Resources 27

Glossary 29

Index 41

List of Figures

Figure 2-1. Inserting the PCI Adapter 7
Figure 3-1. Sample `ifconfig` Output 14
Figure 3-2. Sample `ping` Output 14
Figure 4-1. 5524 Adapter TX Front Panel 15
Figure C-1. Typical 100Base-T Network 25
Figure C-2. Auto-Negotiation Basic Operation.....27

Conventions

Icon Conventions

Icons draw your attention to especially important information:

Note	**The Note icon indicates important points of interest related to the current subject.**
Caution	**The Caution icon brings to your attention those items or steps that, if not properly followed, could cause problems in your machine's configuration or operating system.**
Warning	**The Warning icon alerts you to steps or procedures that could be hazardous to your health, cause permanent damage to the equipment, or impose unpredictable results on the surrounding environment.**

Text Conventions

The following conventions are used in this manual. Computer-generated text is shown in typewriter font. Examples of computer-generated text are: program output (such as the screen display during the software installation procedure), commands, directory names, file names, variables, prompts, and sections of program code.

```
Computer-generated text example
```

Commands to be entered by the user are printed in **`bold Courier`** type. For example:

`cd /usr/tmp`

Pressing the return key (↵ **`Return`**) at the end of the command line entry is assumed, when not explicitly shown. For example:

`/bin/su`

is the same as:

`/bin/su ↵ Return`

Required user input, when mixed with program output, is printed in **`bold Courier`** type. References to UNIX programs and manual page entries follow the standard UNIX conventions.

When a user command, system prompt, or system response is too long to fit on a single line, it will be shown as

```
Do you want the new kernel moved into
\ vmunix?[y]
```

with a backslash at either the beginning of the continued line or at the end of the previous line.

Introduction 1

5524 Features

The 5524 100Base-T adapter provides the required hardware for interfacing a PCI computer to a 100Base-T network, and has the following features and capabilities:

- Compliant with IEEE 802.3u 100Base-T standards and IEEE 802.3 10Base-T standards
- Compliant with PCI revision 2.1
- Supports 100 Mbps over existing category 5 wiring
- Auto-selects 100 Mbps or 10 Mbps over a single physical port
- Four LEDs for status monitoring
- Multiprocessor support
- Multicast support
- Optional EEPROM interface enables easy implementation of jumperless product
- Large internal RX and TX FIFOs

System Requirements

- Approximately 200K free disk space for driver installation
- HP-UX 10.x running on the target system
- HP PCI system

Caution

Handle the adapter carefully; the card is sensitive to static electricity. Do not touch the components or any metal parts on your adapter (hold the adapter by its edges). To prevent card damage from electrostatic discharge, wear a grounding strap.

5524 100Base-T Adapter Installation

2

Overview

This chapter covers the installation procedure for the 5524 100Base-T adapter. The basic steps are:

1. Shut down the operating system and turn off power to the system where the adapter will be installed.
2. Unpack the adapter and record the serial number for future reference.
3. Locate an available I/O slot in your system and install the 5524 adapter in the slot.
4. Connect the appropriate cable between the 5524 adapter and the 100Base-T hub.
5. Reboot your system under HP-UX.

Note **Review this chapter and observe any cautions and warnings prior to the installation.**

Installation Prerequisites

Before installing the 5524 adapter in your system, the following hardware prerequisites must be met:

- HP PCI system with an available PCI slot
- Appropriate cables
- 100Base-T hub with an available port

Note

You'll need a Phillips head and/or a standard slot screwdriver to install the adapter.

Cable and Connector Requirements

This section includes minimum pin-out information for twisted-pair connectors. Connectors on LAN adapters adhere to appropriate standards agreed upon by various standards bodies, and are widely available.

Incorrectly wired or installed cabling is the most common cause of communications problems for local area networks. Interphase recommends that you work with a qualified cable installer for assistance with your cabling requirements.

Caution

The cables used with the 5524 adapter must comply with 802.3u standards.

5524.book : 5524a02.doc 5 Mon Jul 14 13:36:57 1997

Cable Requirements

100Base-TX UTP requires 2-pair Cat-5 cabling.

10-Mbps Twisted-Pair Connector

Use unshielded twisted-pair cables that comply with the IEEE 802.3 10-Mbps standard. This standard supports cabling up to 100 meters only.

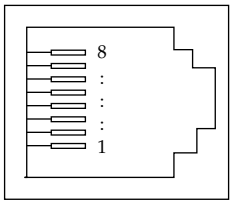

Pins	Signal
1 2 (pair 2)	transmit + transmit -
3 6 (pair 3)	receive + receive -

100-Mbps Twisted-Pair Connector

Use unshielded twisted-pair cables that comply with the IEEE 802.3u 100-Mbps standard. This standard supports cabling up to 100 meters only.

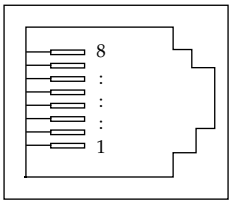

Pins	Signal	
	TX End Node	**T4 End Node**
1 2 (pair 2)	TX:1+ TX:1 -	TX_D1+ TX_D1-
3 6 (pair 3)	RX:1+ RX:1-	RX_D2+ RX_D2-
4 5 (pair 1)	Unused Unused	B1_D3+ B1_D3-
7 8 (pair 4)	Unused Unused	B1_D4+ B1_D4-

Installing the 5524 100Base-T Adapter

To install the 5524 in your system, do the following:

1. Shut down your operating system.

   Wait for the system to indicate that it is halted before turning it off.

2. Remove the I/O adapter slot cover plate.

3. Remove the 5524 from its anti-static packaging. Be sure to hold the adapter by its edges.

Caution

Take the proper precautions to prevent damage to the adapter due to electrostatic discharge. Wear a ground strap or use some other grounding device.

4. Ensure that the adapter is correctly oriented and insert it in the slot. Slide the adapter all the way in and press firmly to properly mate the connectors.

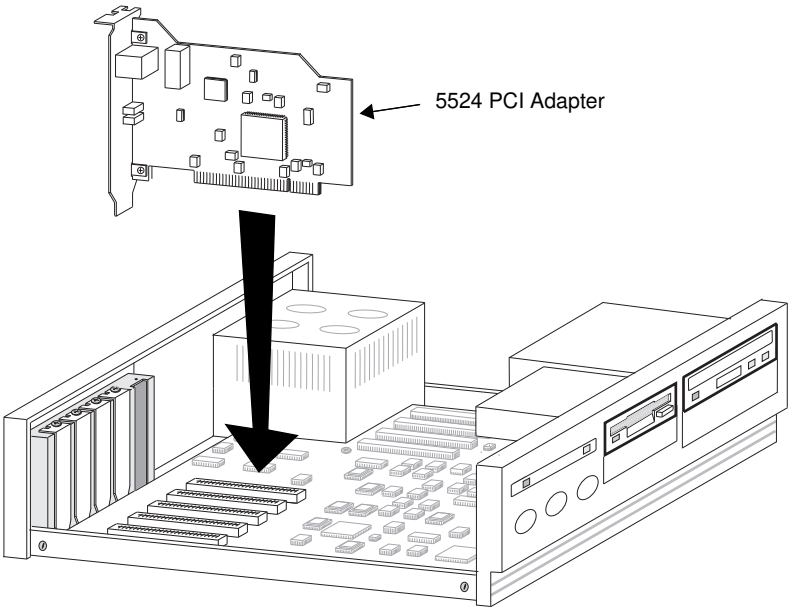

Figure 2-1. Inserting the PCI Adapter

5. Secure the adapter in the slot by tightening the retaining screws.
6. Record the slot number for future reference.
7. Connect the appropriate cable to the 5524 adapter and to the hub. You can connect the cable to either a 100Base-T hub or a 10Base-T hub.
8. Power up the system. The 5524 runs a self-test automatically. During power up, the operating system learns that your adapter has been installed.

The 5524 100Base-T adapter should automatically configure into the system after the software driver is installed.

Note

Record the MAC-level station address of the newly-installed adapter on your network map for future reference.

HP-UX 10.x Driver Installation

3

Overview

This chapter describes the procedure for installing the HP-UX 10.x driver, configuring the 5524 network interface, and monitoring and debugging the interface. This release of the software works with HP-UX 10.x.

This chapter covers

- Installation prerequisites
- Installing the HP-UX 10.x driver via the `swinstall` utility, which installs the software driver and builds the kernel
- Adding the 5524 configuration to the network `/etc/rc.config.d/netconf` file using the HP System Administration Manager (SAM)
- Verifying the interface

Installation Prerequisites

The recommended installation prerequisites for your software, hardware, and network are:

- Software:
  - HP-UX 10.x operating system. You can verify the operating system by entering: **`uname -a`**
  - You must be logged in as “root”.
  - Approximately 1 megabyte of free disk space in the `/usr` directory.

- Installation device: You will need the device name of the DDS tape drive. The installation example assumes the tape device `/dev/rmt/0m` is installed and will be used in this procedure. If you are using another device, substitute the appropriate name in the steps that follow.
- Network:
  - You will need a new IP address, subnet mask (optional), and host name alias for the 5524.
  - You will need appropriate cables to connect the 5524 to the network.

Loading the HP-UX 10.x Driver

The 5524 software loads via the HP-UX 10.x `swinstall` program. Follow the steps described below to continue the installation. Depending on your terminal type, the keystrokes used to navigate through the installation screens will vary. Refer to your Hewlett-Packard documentation.

1. Insert the software media (DDS tape) in the appropriate drive.
2. At the prompt, type:

   `/usr/sbin/swinstall`

   `swinstall` prompts you for installation parameters.
3. Choose the appropriate values for your system configuration. The Source Depot Path defaults to `/var/spool/sw`. Change the Source Depot Path to point to your tape drive.
4. Select `OK`.

A message might appear stating that:

```
The software view is set to show bundles, but no bundles
were found on the source "hostname:/dev/rmt/0m". The
software will be shown as products.
```

This is normal. Select `OK` if this message appears.

5. Highlight the `Interphase PCI 10/100BaseT Driver` fileset (this will be the only one available) and mark it for installation.
6. From the `Action` menu, select `Install (analysis)...`
7. Select `OK` when the analysis has completed.

   `swinstall` prompts you with:

```
Installation will now begin ...

Do you wish to begin Installation?

[Yes]
```

8. Select **`Yes`**.

`swinstall` displays the `Confirmation` dialog:

```
Kernel filesets will be installed on the local
system. The installation process will include
building a new kernel and rebooting the system.

The system will be rebooted as soon as Installation
is complete.

Do you wish to start Installation?

[Yes]
```

9. Select **`Yes`**.

Note **The time required to rebuild the kernel varies with each system.**

10. After the installation completes, choose `OK`.

The machine reboots.

At this point the driver should be installed and ready for network configuration.

11. When the system reboots, run:

`/usr/sbin/lanscan`

The `ife` device should be listed. The device number is followed by an instance number (for example, `ife1`).

12. Reboot the system by typing:

`reboot`

Configuring the Network Interface

Before the 5524 can communicate with other hosts on the network, its interface must be configured. The following procedure explains how to use the HP System Administration Manager (SAM) program to configure the interface. See Hewlett-Packard's *Installing and Administering LAN/9000* for specific information on using SAM.

1. To invoke SAM, type the following at the HP-UX prompt:

   sam

   The SAM program modifies your `/etc/rc.config.d/netconf` file with the interface IP address and netmask that you supply.

2. After configuring the 5524 interface with SAM, reboot the system again by typing:

   reboot

The system should now recognize the 5524 interface.

Verifying the Interface

If you used SAM, the interface verification takes place at bootup. However, if you chose to manually edit the `/etc/rc.config.d/netconf` file and add the interface IP address and netmask information, you can use the `ifconfig` command to verify that the 5524 interface is up. If the 5524 is unable to talk to other hosts, see the troubleshooting chapter for possible solutions. To verify that the interface is configured, do the following:

1. Reboot the system by typing:

   reboot

2. Verify the interface name by typing

   `netstat -rn`

3. Use the `ifconfig` command to verify the interface IP address and netmask. For example, type:

   `ifconfig ife1`

```
ife1: flags=63<UP,BROADCAST,NOTRAILERS,RUNNING>
   inet 17.15.21.131 netmask ffffff00 broadcast 17.15.21.255
```

Figure 3-1. Sample `ifconfig` Output

4. To verify that the 5524 can communicate with other hosts, use the `ping (1M)` command. For example:

   `ping 17.15.21.130`

```
64 bytes from 17.15.21.130: icmp_seq=1. time=3 ms
64 bytes from 17.15.21.130: icmp_seq=2. time=1 ms
64 bytes from 17.15.21.130: icmp_seq=3. time=1 ms
:
:
```

Figure 3-2. Sample `ping` Output

Troubleshooting 4

Overview

This chapter explains the adapter's LEDs, describes some common problems, and offers possible solutions to these problems. If you are unable to resolve a problem you are experiencing, contact your network supplier.

LEDs

Locations

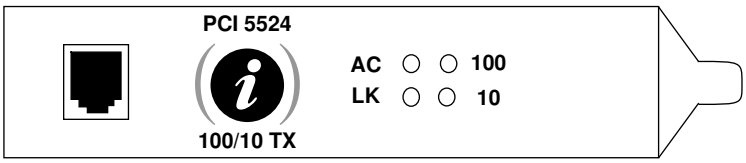

Figure 4-1. 5524 Adapter TX Front Panel

Meanings

When this LED . . .	Is . . .	It means . . .
100	Off	100 Mb mode is off
100	Green	100 Mb mode is on
10	Off	10 Mb mode is off
10	Green	10 Mb mode is on
ACT	Off	No data is being transmitted or received across the cable.
ACT	Yellow	Data is being transmitted or received across the cable.
LINK	Off	There is no external link to the hub or the switch.
LINK	Green	There is an external 100 Mb or 10 Mb link made to the hub or the switch.

Problems and Solutions

Table 4-1. Troubleshooting

Problem	Possible solution(s)
The system does not recognize the adapter and no LEDs light	Check to ensure that the adapter is properly seated in the system backplane.

Problem	Possible solution(s)
The LEDs light correctly, but the system does not recognize the adapter	**1.** Cycle power. **2.** Check configuration.
The system recognizes the adapter and its LEDs light correctly, but the adapter can't communicate with other systems	**1.** Verify that the cable being used complies with the IEEE 802.3u standard. **2.** Ping the broadcast address for the adapter interface and check to see if the activity light on the hub blinks. Other active hosts must be connected to the hub or the activity light does not blink.

5524 Specifications

A

Hardware

Physical Dimensions	5.4 inches (L) x 4 inches (H) 135 mm (L) x 101.6 mm (H)
Bus Interface	Fully PCI compliant
Diagnostics LEDs	100 Mbit link 10 Mbit link Activity indicator Link Up indicator
Power Requirements	2.0A maximum at 5V 10 Watts maximum
Operational Voltage	4.75 to 5.25 V DC
System Compatibility	Software: HP-UX 10.x Hardware: HP PCI system

Cables and Connectors

Cable Type	Connector
Category 5 UTP	RJ-45

Standards Compliance

Standards Body	Standard
ANSI	ANSI TP-PMD ANSI FDDI Signalling System
IEEE	IEEE 802.3 Ethernet

Operating Environment

Temperature	0–55° C / 32–131° F
Relative humidity	10–95% noncondensing
Altitude	-1000–15,000 feet
Air flow	250 LFM minimum

Storage Environment

This section assumes the adapter is stored in its original anti-static bag and box.

Temperature	-40–85° C / -42–185° F
Relative humidity	10–95% noncondensing
Altitude	-1000 to 50,000 feet

PCI/PMC Technology Overview

B

PCI/PMC Technology

A PCI bridge provides a high bandwidth path allowing PCI masters direct access to main memory. Intel® Corporation and the PCI SIG designed the PCI bus as the next generation I/O expansion bus. Its predecessors were ISA, EISA, and MCA. The PCI bus is a high-performance bus found in systems ranging from low-end PCs to high-end servers.

Three sizes of PCI add-in boards are defined: long, short, and variable short length. Systems are not required to support all board types. To accommodate the 5V and 3.3V signaling environments and to facilitate a smooth migration path between the voltages, three add-in board electrical types are specified: a “5 volt” board which plugs into only 5V connectors, a “universal” board which plugs into both 5V and 3.3V connectors, and a “3.3 volt” board which plugs into only 3.3V connectors.

The PMC bus was designed for embedded environments. It implements PCI bus logic in a daughtercard (mezzanine) form factor.

100Base-T Technology Overview

C

Overview

100Base-T is the IEEE 802.3u standard providing a 100-megabits-per-second data rate.

100Base-T technology is based on the CSMA/CD signaling used for 10Base-T. This standard allows auto-negotiation of speed and duplex configurations.

100Base-TX

The 100Base-TX adapter is based on specifications in the ANSI TP-PMD standard. 100Base-TX operates at 100Mbps over two pairs of wires. One pair is for receiving data; the other is for transmitting. The wire has an approximate impedance of 100 Ω and is less than or equal to 100 meters in length.

The physical connection device (PHY) continuously monitors the receive data path for activity as a means of checking that the link is working correctly. This is done continuously during moderate to heavy traffic or even idle conditions on the network.

100Base-T4

The 100Base-T4 system operates over four pairs of wires. One pair is for transmitting data, one pair is for receiving data, and the remaining two pairs are bidirectional. So, for example, when data is being transmitted, the two bidirectional pairs and the transmit pair are all used for transmitting, while the receive

pair is used for sensing collisions. This makes it possible to provide Fast Ethernet signals over standard voice-grade Category 3 unshielded twisted-pair cable.

The 100Base-T4 media specification is designed to allow segments of up to 100 meters in length when using EIA/TIA Category 3, 4, or 5 unshielded twisted-pair cable. Category 5 cable allows fewer collisions due to its improved signal integrity.

The physical connection device (PHY) continuously monitors the receive data path for activity as a means of checking that the link is working correctly. When the network is idle, 100Base-T4 transceivers send link pulses over the segment to verify link integrity. These pulses are called Fast Link Pulses, and they are also used in the auto-negotiation mechanism,

5524.book : 5524appc.doc 25 Mon Jul 14 13:36:57 1997

which allows a multi-speed hub to detect the operation speed of an Ethernet device that is connected to it, and to adjust the speed of the hub ports accordingly.

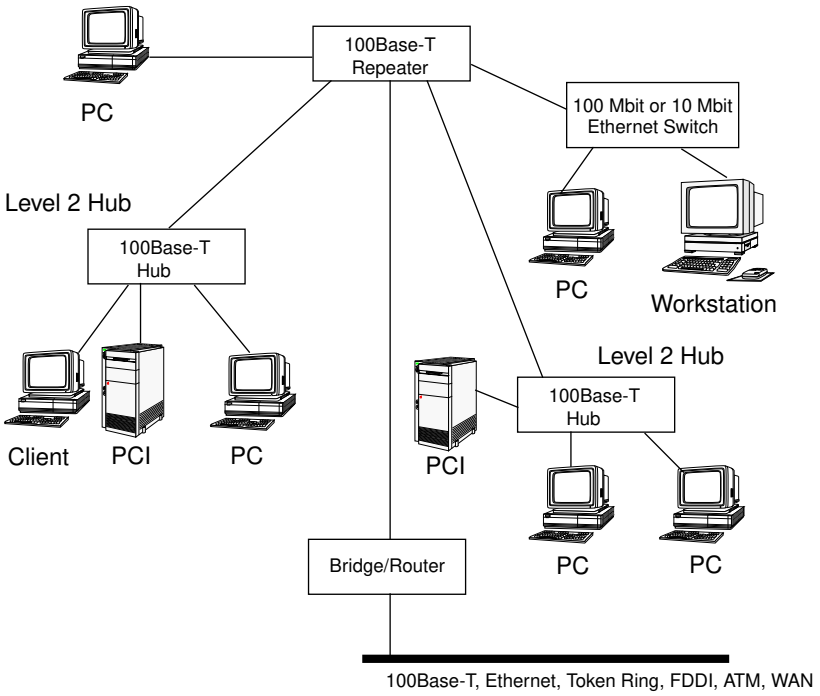

Figure C-1. Typical 100Base-T Network

Auto-Negotiation

Auto-negotiation is like a rotary switch that automatically switches to the correct technology (for example, 10Base-T or 100Base-TX Full Duplex). Once the highest-performance common mode is determined, auto-negotiation passes control of the cable to the appropriate technology and becomes

transparent until the connection is broken. Auto-negotiation leverages the proven link function of 10Base-T to provide robust operation over Category 3, 4, or 5 UTP.

The following lists define the priority hierarchy for resolving multiple common abilities. That is, if both devices support both 10Base-T and 100Base-TX, auto-negotiation at both ends will connect 100Base-TX instead of 10Base-T.

The priority hierarchy for TX mode is:

1. 100Base-TX Full Duplex
2. 100Base-TX
3. 10Base-T Full Duplex
4. 10Base-T

The priority hierarchy for T4 mode is:

1. 100Base-T4
2. 10Base-T Full Duplex
3. 10Base-T

To account for technologies that existed prior to auto-negotiation, auto-negotiation passes the signals present on the receiver to the 100Base-TX and 100Base-T4 Link Monitor functions.

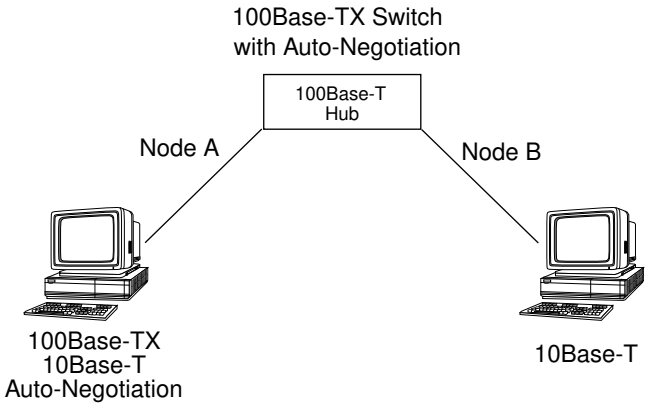

Figure C-2. Auto-Negotiation Basic Operation

World-Wide Web Resources

You can find information related to 100Base-T technology at the following web sites:

- `http://www.iol.unh.edu/consortiums/fe/fast_ethernet_consortium.html`
- `http://wwwhost.ots.utexas.edu/ethernet/100mbps.html`

Glossary

10Base-T

An IEEE 802.3 network specification using unshielded twisted pair cabling and running at 10 Mbps. 10Base-T recommends a maximum segment length of 100 meters.

100Base-T

A recent Fast-Ethernet technology developed by the IEEE 802-3 committee to increase the speed of standard networking from the existing 10Base-T Ethernet speeds. 100Base-T comes in two primary versions, TX and T4, as well as a fiber version.

100Base-TX

A version of 100Base-T technology that allows the use of only 2 pairs of wire, but because of the resulting signaling rates, it is limited to category 5 or better cabling installations. One pair is used for transmitting data and the other is used for receiving data or detecting collisions. The clock rate on each pair is 100 Mbits. The 100Base-TX version of the technology allows full-duplex implementations because of this balanced cable usage.

100Base-T4

A version of 100Base-T technology that uses 4 pairs of wire. By spreading the data across these pairs, it can be used over category 3 (or better) cabling. One pair is for transmitting data, one pair is for receiving data, and the remaining two pairs are bidirectional. So when data is being transmitted, the two bidirectional pairs and the transmit pair are all used for transmitting, while the receive pair is used for sensing

collisions. When data is being received, the two bidirectional pairs and the receive pair are all used for receiving. Note that since T4's use of the cable is asymmetrical, it cannot support Full Duplex configurations. Spreading the data across three pairs of wire allows each pair to operate at 33 Mbits and makes T4 more robust than TX in terms of noise immunity, signal loss, and cable quality.

5B/6B

The process of encoding (mapping) 5-bit data quintets into predetermined 6-bit symbols. This process is used to balance the data pattern to contain equal numbers of 0's and 1's, thus providing guaranteed clock transition synchronization for receiver circuitry.

5B/6B encoding provides added error-checking capability, which allows detection of invalid symbols, such as symbols with more than three 1's or 0's in a row.

ARP (Address Resolution Protocol)

The Internet protocol used to dynamically translate the Internet address of a network host to its LAN hardware address. This action is limited to LANs that support hardware broadcasts.

Attenuation

Signal power lost in a transmission medium as the signal travels from sender to receiver.

Auto-Negotiation

Auto-negotiation is a mechanism that takes control of the cable when a connection is established to a network device. Auto-negotiation detects the various modes that exist in the

device on the other end of the wire (the Link Partner) and advertises its own abilities to automatically configure the highest performance mode of interoperation. As a standard technology, this allows simple, automatic connection of devices from a variety of manufacturers that support a variety of modes.

Backbone

A network configuration that connects LANs in order to form an integrated network.

Bandwidth

Bandwidth typically indicates a circuit's capacity for transmitting data. Generally, the greater the bandwidth, the more information can be sent through a circuit during a given amount of time.

Bit

Binary Digit. The smallest unit of data that a computer can manipulate. A bit has two states, ON (1) and OFF (0).

Bridge

An internetworking device used to connect two or more computer networks, and to forward packets among the networks.

Buffer

Temporary memory storage area set aside to hold frequently accessed data, or data to be processed.

Byte

An 8-bit unit of data. A byte is the smallest addressable unit of memory.

Client

A computer that uses resources provided by another computer, known as the server, on the network.

CRC (Cyclic Redundancy Check)

An error-checking procedure in which bytes at the end of a frame are used by the receiving node to detect transmission problems.

CSMA/CD (Carrier Sense Multiple Access/Collision Detect)

The low-level Ethernet network arbitration protocol. Ethernet nodes with data to transmit sense the link for a carrier signal. If such a node does not detect a carrier signal (that is, if the link is idle), the node begins transmitting its data on the link. While transmitting, the node listens. When two nodes transmit at once, the data gets corrupted. The nodes detect this and continue to transmit for a certain length of time to ensure that all nodes detect the collision. The transmitting nodes then wait for a random time before attempting to transmit again, thus minimizing the chance of another collision. The ability to detect collision during transmission reduces the amount of bandwidth wasted on collisions in comparison with simple broadcasting.

Device Driver

The software program which enables a host computer to communicate with peripheral devices such as disk drives, network interface cards (NICs), and so on.

DMA (Direct Memory Access)

A fast method of moving data between the memory of two processor subsystems without processor intervention. The data transfer is done under hardware control.

Fast Ethernet Consortium

The Fast Ethernet Consortium, hosted by the University of New Hampshire, tests Fast Ethernet (IEEE 802.3u) products and software from both interoperability and conformance perspectives. For more information about the Consortium, see `http://www.iol.unh.edu/consortiums/fe/fast_ethernet_consortium.html`

Fast Link Pulses

Communication mechanism used in 10Base-T and 100Base-T networks to indicate link status and (in auto-negotiation equipped devices) to communicate information about abilities and to negotiate communication methods. 10Base-T uses Normal Link Pulses (NLPs), which indicate link status only. 10Base-T and 100Base-T devices equipped with auto-negotiation exchange information using a Fast Link Pulse mechanism which is compatible with 10Base-T.

Frame

A group of data bits in a specific format with flags at the beginning and at the end. It is a series of bytes sent with a header at the data link layer. Packets, on the other hand, refer to data at the network layer of the OSI stack and are considered to be contained inside a frame.

Full Duplex

A method of communication between two endpoints where data is transmitted simutaneously in both directions.

Gateway

Device used to connect two or more networks. The gateway routes the information among the networks.

Half Duplex

A method of communication between two endpoints where data is transmitted in only one direction at any given time.

Host

In general, any computer on a network. Host adapters are typically installed to provide a physical interface to the network. The host uses software to communicate with the adapter and to request the services of the adapter to transfer information to and from attached devices.

Host Adapter

A hardware device that provides the connection from the host computer bus to attached devices.

Hostname

A unique name that identifies each host machine on a network.

IP (Internet Protocol)

A network layer protocol that contains addressing and control information to allow packets to be routed over dissimilar networks.

KB (Kilobyte)

One KB or KByte is equivalent to 1024 bytes.

LLC (Logical Link Control)

The upper of the two sublayers of the OSI Reference Model's Data Link Layer. Defines the transmission of data between two stations with no intermediate switching nodes.

MAC (Media Access Control)

The part of the ISO model that describes how devices share access to a network. Ethernet, Token Ring, and FDDI are MAC-layer specifications. Wiring hubs deal primarily with MAC-layer equipment.

MB (Megabyte)

One MB or Mbyte is equivalent to 1,048,576 bytes.

Mbps

Megabits per second (1,048,576 bits per second).

Multicast

A technique that allows copies of a single packet or cell to be passed to a selected subset of all possible destinations.

Network

An interconnection of multiple stations or systems that are able to send messages to, or receive messages from, one another.

Network Interface

A defined path through a stack of protocols. In terms of hardware it is the device through which data packets are sent and received.

A network interface is identified by a name and a unit. The name and unit combine to form the interface identifier. The unit number can range from 0 to 4 (for example, lan0) due to a maximum of five LAN cards supported per system.

NIC (Network Interface Card)

An adapter that connects a station to a network.

NMS (Network Management Station)

The system responsible for managing a network or a portion of a network. The NMS communicates to network management agents residing in the managed node using a network management protocol.

Node

A device, such as a computer, station, or concentrator, that is connected to a network.

Packet

A group of bits, including data and control elements, that are transmitted together. Data is digitized (encoded) and transferred over LANs. Unlike voice and video transmissions that require a minimum constant rate bandwidth, burst data can be transmitted in almost any order and reconstructed by the receiving node.

PCI (Peripheral Component Interconnect)

An Intel standard governing the connections and timings for a local bus that is 32 bits wide operating at 33 MHz. It brings high speed peripheral functions closer to the microprocessor while maintaining compatibility with traditional 16-bit expansion systems operating at 8 MHz.

PDU (Protocol Data Unit)

A sequence of contiguous bits delivered as a unit from the physical medium attachment sublayer. A valid PDU is at least 24 bits in length, and contains address fields and a control field.

Physical Layer

Layer 1 of the OSI reference model. Defines and handles the electrical and physical connections between systems. The Physical Layer can also encode data in a form that is compatible with the medium (coaxial, twisted pair, fiber, and so on).

PING (Packet Internet Groper)

A TCP/IP protocol facility used to test the reachability of destinations by sending an ICMP (Internet Control Message Protocol) echo request and waiting for a reply.

PMC (PCI Mezzanine Card)

A daughtercard form factor implementation of the PCI bus specification.

Priority Resolution Function

The mechanism used by auto-negotiation to select the network connection type when more than one common network ability exists (100Base-TX, 100Base-T4, 10Base-T, and so on). The priority resolution table defines the relative hierarchy of connection types from the highest performance to the lowest performance.

Protocol

A set of rules and conventions that govern the exchange of information between communicating parties.

Renegotiation

Restart of the auto-negotiation function caused by a connectivity change or user interaction.

Routing Table

A table containing information about the routes to nodes on other LANs. The connections which make up a route are made through gateways. When additional gateways are added, or when network addresses change, the routing table must be updated. Each node has a routing table to enable it to determine the routes to nodes on other LANs.

SNMP (Simple Network Management Protocol)

A high-level, standards-based protocol for network management, usually used in TCP/IP networks. An SNMP monitor controls and measures the activities of SNMP agents that are embedded in nodes and network devices on the network. SNMP relies on Management Information Bases (MIBs) embedded in the network resources to monitor and control the network.

TCP/IP (Transmission Control Protocol/Internet Protocol)

A set of communications protocols that define how different types of computers talk to each other. It is the standard architecture for internetworking multiple organizations, and the common link that ties the huge Internet together.

Technology Ability Field

An 8-bit field in the auto-negotiation Link Code Word that is used to indicate Local Device support for 10Base-T, 100Base-TX, 100Base-T4, and/or Full Duplex.

TP-PMD (Twisted-Pair, Physical Media Dependent)

The 100 Mbps FDDI standard as implemented on UTP cable.

Index

When using this index, keep in mind that a page number indicates only where referenced material begins. It may extend to the page or pages following the page referenced.

B
bus interface 19

C
cables 19
caution icon explained v
connectors 19

D
diagnostics 19

E
environment
    operating 20
    storage 20

H
hardware 19
HP-UX driver installation 9

I
IEEE 802.3 20
ifconfig 13
    output 14
ife device 12
installation prerequisites 4, 9
    installation device 10
    network 10
    software 9

L
lanscan 12
LEDs 16

M
multicast support 1
multiprocessor support 1

P
physical dimensions 19
power
    requirements 19
    specifications 19

S
Source Depot Path 10
    /dev/rmt/0m 10
specifications 19
standards compliance 20
swinstall 10
system compatibility 19
system requirements 1

T
tape device 10
    /dev/rmt/0m 10
timer defaults 19
troubleshooting 15

W
warning icon explained v

Product Registration Card

Please take a minute to register your Interphase product. This will enable us to notify you about software updates and product enhancements.

Name _____
Title _____
Company Name _____
Company Address _____
City _____
State _____ Zip _____ Country _____
Province _____
Telephone ( ) _____
Fax ( ) _____
E-mail Address _____

Which product did you purchase? _____
Serial Number _____
Where did you purchase this product (company name)? _____
Date Purchased _____

Number of client nodes at this site: _____
Operating System(s) being used with this product:

❑ Solaris ❑ SunOS ❑ AIX ❑ NetWare
❑ HP-UX ❑ IRIX ❑ Mac OS ❑ Windows NT
❑ PC NFS ❑ DEC Ultrix ❑ Other _____

Operating System Version: _____
Network Protocol(s) in use:

❑ TCP/IP ❑ IPX ❑ AppleTalk ❑ Other _____

We welcome your comments, ideas, and suggestions. You can fax additional comments to 214/654-5500, or send them to intouch@iphase.com

_____
_____
_____
_____

If you are interested in receiving information on other products from Interphase, please check the appropriate boxes:

❑ ATM ❑ FDDI ❑ SCSI ❑ Fibre Channel ❑ 100 BaseT

If you are mailing this card from outside the United States, please add postage.

11/96

5524.book : smlnrmrg.doc 44 Mon Jul 14 13:36:57 1997

NO POSTAGE
NECESSARY
IF MAILED
IN THE
UNITED STATES

BUSINESS REPLY MAIL

FIRST-CLASS MAIL PERMIT NO. 5784 DALLAS TEXAS

POSTAGE WILL BE PAID BY ADDRESSEE

ATTN: WARRANTY DEPARTMENT
INTERPHASE CORPORATION
13800 SENLAC DR
DALLAS TX 75234-9600