4824 EISA 100Base-T Adapter for HP-UX 10.x Installation Guide

4824 EISA 100Base-T Adapter for HP-UX 10.x Installation Guide

Document No. UG04824-000, REVB

Release Date: December 20, 1996

Copyright Notice

© 1996 by Interphase Corporation. All rights reserved.

Printed in the United States of America, 1996.

This manual is licensed by Interphase to the user for internal use only and is protected by copyright. The user is authorized to download and print a copy of this manual if the user has purchased one or more of the Interphase adapters described herein. All copies of this manual shall include the copyright notice contained herein. No part of this manual, whether modified or not, may be incorporated into user's documentation without prior written approval of

Interphase Corporation
13800 Senlac
Dallas, Texas 75234

Phone: (214) 654-5000
Fax: (214) 654-5500

Disclaimer

Information in this manual supersedes any preliminary specifications, preliminary data sheets, and prior versions of this manual. While every effort has been made to ensure the accuracy of this manual, Interphase Corporation assumes no liability resulting from omissions, or from the use of information obtained from this manual. Interphase Corporation reserves the right to revise this manual without obligation to notify any person of such revision. Information available after the printing of this manual will be in one or more Read Me First documents included with this product.

Trademark Acknowledgments

Interphase® is a registered trademark of Interphase Corporation.

CellView™ and (i)chip™ are trademarks of Interphase Corporation.

Windows NT® is a registered trademark of Microsoft, Inc.

Windows® is a registered trademark of Microsoft, Inc.

Novell® and NetWare® are registered trademarks of Novell, Inc.

SunOS™ and Solaris® are trademarks of Sun Microsystems, Inc.

SPARC® is a registered trademark of SPARC International, Inc.

SPARCstation™ is a trademark of SPARC International, Inc., licensed exclusively to Sun Microsystems, Inc.

LattisCell™, EtherCell™, and SAHI™ are trademarks of Bay Networks, Inc.

UNIX® is a registered trademark of UNIX Systems Laboratories Inc.

IBM® is a registered trademark of International Business Machines.

HP-UX® is a registered trademark of Hewlett-Packard.

AIX™ is a trademark of IBM Corporation.

Intel® and Pentium® are registered trademarks of Intel Corporation.

Tachyon™ is a trademark of Hewlett-Packard.

Precision Bus™ is a trademark of Hewlett-Packard Company.

Assistance

Product Purchased from Reseller

Contact the reseller or distributor if

- You need ordering, service or any technical assistance.
- You received a damaged, incomplete or incorrect product.

Product Purchased Directly from Interphase Corporation

Contact Interphase Corporation directly for assistance with this, or any other Interphase Corporation product. Please have your purchase order and serial numbers ready.

Customer Support

United States:	Telephone:	(214) 654-5555
	Fax:	(214) 654-5500
	E-Mail:	intouch@iphase.com
United Kingdom:	Telephone:	44 (0) 1869-321222
	Fax:	44 (0) 1869-247720
Asia / Pacific Rim:	Sales:	(81) 3-5423-6513
	Fax:	(81) 3-5423-6511
	Support:	(81) 3-5423-6514

World Wide Web

http://www.iphase.com

Anonymous FTP Server

ftp.iphase.com

Safety Precautions

The following general safety precautions must be observed during all phases of operation of this equipment. Failure to comply with these precautions or with specific warnings elsewhere in this manual violates safety standards of design, manufacture, and intended use of the equipment. Interphase Corporation assumes no liability for the user's failure to comply with these requirements. You, as the user of the

product, must observe all stated warnings and safety precautions in order to safely operate the equipment in your environment.

Do Not Substitute Parts or Modify Equipment

Because of the danger of introducing additional hazards, do not install substitute parts or perform any unauthorized modification of the equipment. Contact your local Interphase representative for service and repair to ensure that safety features are maintained.

Ground the Instrument

To minimize shock hazard, the equipment chassis and enclosure must be connected to an electrical ground. The power cable must either be plugged into an approved three-contact electrical outlet or used with a three-contact to two-contact adapter, with the grounding wire (green) firmly connected to an electrical ground (safety ground) at the power outlet.

Do Not Operate in an Explosive Atmosphere

Do not operate the equipment in the presence of flammable gases or fumes. Operation of any electrical equipment in such an environment constitutes a definite safety hazard.

Keep away from Live Circuits

Do not install or replace the component with power cable connected. Under certain conditions, dangerous voltages may exist even with the power cable removed. To avoid injuries, always disconnect power and discharge circuits before touching them.

Observe Dangerous Procedure Warnings

Warnings precede potentially dangerous procedures throughout this manual. Instructions contained in the warnings must be followed. You should also employ all other safety precautions which you deem necessary for the operation of the equipment in your operating environment.

Warning

This equipment generates, uses, and can radiate electromagnetic energy. It may cause or be susceptible to electromagnetic interference (EMI) if not installed and used in a cabinet with adequate EMI protection.

Warranty

Interphase warrants that the Products provided to customer hereunder will be free of defects in material and workmanship for twelve (12) months after shipment to the customer (the "Warranty Period"). Products must be returned in accordance with Interphase's standard warranty return policy. This warranty shall not apply to Products that have been damaged due to accident, misuse, electrical stress, or from any other cause due to use of the Products not in accordance with the Product's documentation. Customer shall be charged a fee for Products returned to Interphase which are diagnosed as "no problem found (NPF)".

REMEDIES AND EXCLUSIONS. THE SOLE LIABILITY OF INTERPHASE AND CUSTOMER'S SOLE REMEDY FOR FAILURE TO CONFORM TO THESE WARRANTIES SHALL BE LIMITED TO, AT INTERPHASE'S SOLE OPTION, REPAIR OR REPLACEMENT OF THE PRODUCTS OR CORRECTION OF THAT PART OF THE SOFTWARE, WHICH FAILS TO CONFORM TO THESE WARRANTIES. EXCEPT AS EXPRESSLY STATED HEREIN, AND EXCEPT AS TO TITLE, THERE ARE NO OTHER WARRANTIES, EXPRESS OR IMPLIED, INCLUDING WARRANTIES OF MERCHANTABILITY OR FITNESS FOR ANY PARTICULAR PURPOSE, IN CONNECTION WITH OR ARISING OUT OF ANY PRODUCT OR SOFTWARE PROVIDED FOR IN THIS AGREEMENT OR UNDER ANY PURCHASE ORDER. IN NO EVENT SHALL INTERPHASE BE LIABLE FOR ANY INDIRECT, SPECIAL OR CONSEQUENTIAL DAMAGES SUCH AS LOSS OF DATA, LOSS OF ANTICIPATED PROFITS OR ANY OTHER ECONOMIC LOSS IN CONNECTION WITH OR OTHERWISE ARISING OUT OF A BREACH OF THE WARRANTIES STATED HEREIN.

THIS MANUAL IS PROVIDED "AS IS." INTERPHASE DISCLAIMS ALL WARRANTIES, EXPRESS OR IMPLIED, INCLUDING THOSE OF MERCHANTABILITY AND FITNESS FOR A PARTICULAR PURPOSE OR ARISING FROM A COURSE OF DEALING, USAGE, OR TRADE PRACTICE.

IN NO EVENT SHALL INTERPHASE BE LIABLE FOR ANY INDIRECT, SPECIAL, CONSEQUENTIAL, OR INCIDENTAL DAMAGES, INCLUDING, WITHOUT LIMITATION, LOST PROFITS OR LOSS OR DAMAGE TO DATA ARISING OUT OF THE USE OR INABILITY TO USE THIS MANUAL, EVEN IF ADVISED OF THE POSSIBILITY OF SUCH DAMAGES.

4824 FCC Regulatory Compliance

FCC ID: EJMNPDEILA8265

This device complies with Part 15 of the FCC Rules. Operation is subject to the following two conditions:

- This device may not cause harmful interference.
- This device must accept any interference received, including interference that may cause undesired operation.

Radio Frequency Interference Statement

This equipment has been tested and found to comply with the limits for a Class B digital device, pursuant to Part 15, Subpart B of the FCC Rules. This equipment generates, uses, and can radiate radio frequency energy. If not installed and used in accordance with the instructions, it may cause interference to radio communications.

The limits are designed to provide reasonable protection against such interference in a residential situation. However, there is no guarantee that interference will not occur in a particular installation. If this equipment does cause interference to radio or television reception, which can be determined by turning the equipment on and off, the user is encouraged to try to correct the interference by one or more of the following measures:

- Reorient or relocate the receiving antenna of the affected radio or television.
- Increase the separation between the equipment and the affected receiver.
- Connect the equipment and the affected receiver to power outlets on separate circuits.
- Consult the radio/TV dealer or an experienced radio/TV technician for help.

Modifications

Changes or modifications not expressly approved by Interphase Corporation could void the user's authority to operate the equipment.

Shielded Cables

Shielded cable must be used with this equipment to maintain compliance with FCC Regulations.

Contents

Conventions iii

Icon Conventions iii
Text Conventions iv

CHAPTER 1 Introduction

Overview 1
4824 Adapter Features 1
4824 System Requirements 2
4824 Compatibility 2

CHAPTER 2 Installing the Hardware

Overview 5
Inspecting the Adapter 5
Inserting the Adapter 6
Connecting the Adapter to the Network 7

CHAPTER 3 HP-UX 10.x Driver Installation

Overview 9
Installation Prerequisites 9
Loading the HP-UX 10.x Software Driver 10
Configuring the Network Interface 13
Verifying the Network Interface 14

CHAPTER 4 Troubleshooting

Miscellaneous Checks 17
LEDs 18
Problems and Possible Solutions 19

APPENDIX A 4824 Specifications

Adapter Card Specifications 21
SRAM Transmit/Receive Buffer 21
Interrupt Levels 21
Network Interface 21
Physical Dimensions 22
Environmental Operating Range 22
Power Requirements 22
RJ-45 Connector Pin Assignments 22
Cabling Requirements 23

APPENDIX B 100Base-T Technology Overview

Overview 25
100Base-TX 25
100Base-T4 25
Auto-Negotiation 27
World-Wide Web Resources 29

Conventions

Icon Conventions

Icons draw your attention to especially important information:

Note	**The Note icon indicates important points of interest related to the current subject.**
Caution	**The Caution icon brings to your attention those items or steps that, if not properly followed, could cause problems in your machine's configuration or operating system.**
Warning	**The Warning icon alerts you to steps or procedures that could be hazardous to your health, cause permanent damage to the equipment, or impose unpredictable results on the surrounding environment.**

Text Conventions

The following conventions are used in this manual. Computer-generated text is shown in typewriter font. Examples of computer-generated text are: program output (such as the screen display during the software installation procedure), commands, directory names, file names, variables, prompts, and sections of program code.

```
Computer-generated text example
```

Commands to be entered by the user are printed in **bold Courier** type. For example:

cd /usr/tmp

Pressing the return key (↵ **Return**) at the end of the command line entry is assumed, when not explicitly shown. For example:

/bin/su

is the same as:

/bin/su ↵ Return

Required user input, when mixed with program output, is printed in **bold Courier** type. References to UNIX programs and manual page entries follow the standard UNIX conventions.

When a user command, system prompt, or system response is too long to fit on a single line, it will be shown as

```
Do you want the new kernel moved into
\ vmunix?[y]
```

with a backslash at either the beginning of the continued line or at the end of the previous line.

Introduction 1

Overview

This chapter is an introduction to the 4824 EISA 100Base-T adapter.

The 4824 EISA 100Base-T Adapter is a 32-bit adapter designed for computer systems with an EISA bus. It provides the required hardware for interfacing an EISA computer to a 100Base-T network. 100Base-T is defined as the IEEE 802.3u standard providing a 100-megabits-per-second data rate.

This adapter is a dual-speed adapter connected to an Ethernet network with a single RJ-45 connector over UTP cable. The adapter automatically senses the speed of the hub to which it is connected and switches to either 10 Mbps or 100 Mbps.

When the adapter is connected to a hub that supports 10Base-T Ethernet (10 Mbps), it switches to a network speed of 10 Mbps.

When the adapter is connected to a hub that supports 100Base-TX Fast Ethernet (100 Mbps), it switches to a network speed of 100 Mbps.

The 100Base-T technology is based on the CSMA/CD signaling used for 10Base-T. This standard allows auto-negotiation of speed and duplex configurations and is defined by the IEEE 802.3u specification.

4824 Adapter Features

The 4824 has the following features and capabilities:

- Bus mastering for high throughput and low processor utilization
- Single-slot, 32-bit half-card
- Automatic EISA configuration without jumpers
- Four status LEDs
- Single-shielded RJ-45 connector for use at either speed (Category 3, 4, or 5 UTP cabling for 10Base-T Ethernet networks, and Category 5 UTP for 100Base-TX Fast Ethernet networks)
- Compliant with IEEE 802.3u 100Base-T standards and IEEE 802.3 10Base-T standards
- Compliant with EISA revision 3.1
- Supports 100 Mbps over existing category 5 wiring
- Auto-selects 100-Mbps or 10-Mbps over a single physical port
- Multiprocessor support
- Multicast support

4824 System Requirements

- Approximately 200K free disk space for driver installation
- HP-UX running on the target system

4824 Compatibility

The 4824 is compatible with the following:

- Software: HP-UX 10.x
- Hardware: HP system with EISA bus support

4824.book : 4824a01.doc 3 Fri Dec 20 18:26:38 1996

Caution

Handle the 4824 carefully; it is sensitive to static electricity. Do not touch its components or any metal parts other than the faceplate (hold the adapter by its edges). To prevent card damage from electrostatic discharge, use a grounding device (that is, a ground strap).

Installing the Hardware

2

Overview

This chapter explains how to install the 4824 in your computer and connect it to a network. The basic steps are:

1. Inspect the adapter.
2. Insert the adapter.
3. Connect the adapter to the network.
4. Continue with Chapter 3 to install the driver.

Inspecting the Adapter

Before installing the adapter in your computer, you need to visually inspect it for damage that might have occurred during shipment from the factory.

Caution

The adapter is packed in an antistatic bag to protect it during shipment. Keep the adapter in its protective antistatic bag until you are ready to install it in the host computer. To prevent damage to the adapter due to electrostatic discharge, wear a grounding strap and handle the adapter only by its edges. Do not touch its components or any metals parts other than the faceplate.

1. Open the shipping container and carefully remove its contents.
2. Inspect each item for damage. If you find any omissions or damage, contact your network supplier and the carrier (for example, UPS or Federal Express) that delivered the package.

Inserting the Adapter

Warning

Before you start, remove all jewelry from your hands and wrists. Be sure to use only insulated or nonconductive tools.

To insert the adapter in the computer, do the following:

1. Turn off and unplug the computer, and disconnect all cables that are connected to the main system unit.

Warning

Turn off the power before removing the computer's cover. Failure to do so could shock you and may damage the adapter or computer.

2. Remove the computer's cover and select any of the available EISA expansion slots.

3. Push the adapter into the slot until the adapter is seated firmly. The adapter backplate should be flush with the computer chassis. Be sure that the connector fingers of the adapter are completely seated in the slot.
4. Secure the adapter with a screw.
5. Replace the computer cover, plug in the computer's power cord, and reconnect all previously connected cables.

Connecting the Adapter to the Network

This section describes how to connect 10 Mbps or 100 Mbps network cables to the 4824.

Note **You must connect the adapter to the network before loading the driver.**

The backplate of the adapter contains one RJ-45 connector. The adapter automatically senses and switches speed based on the type of hub to which it is connected.

For 10Base-T Ethernet networks, the adapter uses Category 3, 4, or 5 UTP cable. For 100Base-TX Ethernet networks, the adapter supports Category 5 UTP cabling. For more information about cabling, see *Cabling Requirements* on page 23.

Four LEDs are located next to the RJ-45 connector. Each 4824 has two LEDs to indicate link status, and two LEDs to indicate read/write activity. The yellow link LED shows 10 Mbps link

status; the green link LED shows 100 Mbps link status. The yellow read/write LED indicates 10 Mbps activity; the green read/write LED indicates 100 Mbps activity. For more detailed information, see *LEDs* on page 18.

The adapter uses an onboard transceiver with twisted-pair cable. To establish a valid 10 Mbps connection, the cable must be connected to a 10Base-T hub. To establish a valid 100 Mbps connection, the cable must be connected to a 100Base-TX hub. Connect the network cable as follows:

1. Make sure that the connector on your cable is wired appropriately for standard 10Base-T or 100Base-TX adapter cards.

Note

The UTP wire pairs and pin definitions for 100Base-TX are identical to those for 10Base-T when used with category 5 UTP cable. The "straight-through" connection should be made from the adapter through the cable and connectors to the hub. No crossover in the cable is required.

For more information about RJ-45 connector pin assignments, see *RJ-45 Connector Pin Assignments* on page 22.

2. Align the RJ-45 connector on the end of the twisted-pair cable with the notch on the adapter's RJ-45 port and insert it into the RJ-45 port.

The next step is to install the driver. The HP-UX driver automatically detects the media type and configures the adapter accordingly.

HP-UX 10.x Driver Installation

3

Overview

This chapter describes the procedure for installing the HP-UX 10.x driver, configuring the 4824 network interface, and monitoring and debugging the interface. This release of the software works with HP-UX 10.x.

This chapter covers

- Installation prerequisites
- Installing the HP-UX 10.x driver via the `swinstall` utility, which installs the software driver and builds the kernel
- Adding the 4824 configuration to the network `/etc/rc.config.d/netconf` file using the HP System Administration Manager (SAM)
- Verifying the interface

Installation Prerequisites

The recommended installation prerequisites for your software, hardware, and network are:

- Software:
  - HP-UX 10.x operating system. You can verify the operating system by entering: **`uname -a`**
  - You must be logged in as “root.”
  - Approximately 1 megabyte of free disk space in the `/usr` directory.

- Installation device: You will need the device name of the DDS tape drive. The installation example assumes the tape device `/dev/rmt/0m` is installed and will be used in this procedure. If you are using another device, substitute the appropriate name in the steps that follow.
- Network:
  - You will need a new IP address, subnet mask (optional), and host name alias for the 4824.
  - You will need appropriate cables to connect the 4824 to the network.

Loading the HP-UX 10.x Software Driver

The 4824 software loads via the HP-UX 10.x `swinstall` program. Depending on your terminal type, the keystrokes used to navigate through the installation screens will vary. For more detailed information, see your Hewlett-Packard documentation.

1. Insert the software media (DDS tape) in the appropriate drive.
2. At the prompt, type:

   `/usr/sbin/swinstall`

   `swinstall` prompts you for installation parameters.
3. Choose the appropriate values for your system configuration. The Source Depot Path defaults to `/var/spool/sw`. Change the Source Depot Path to point to your tape drive.
4. Select `OK`.

A message might appear stating that:

```
The software view is set to show bundles, but no bundles
were found on the source "hostname:/dev/rmt/0m". The
software will be shown as products.
```

This is normal. If this message appears, select `OK`.

5. Highlight the **Interphase EISA 10/100BaseT Driver** fileset (the only one available) and mark it for installation.
6. From the `Action` menu, select `Install (analysis)...`
7. Select `OK` when the analysis has completed.

   `swinstall` prompts you with:

```
Installation will now begin ...

Do you wish to begin Installation?

[Yes]
```

8. Select **`Yes`**.

`swinstall` displays the Confirmation dialog:

```
Kernel filesets will be installed on the local
system. The installation process will include
building a new kernel and rebooting the system.

The system will be rebooted as soon as Installation
is complete.

Do you wish to start Installation?

[Yes]
```

9. Select **`Yes`**.

Note **The time required to rebuild the kernel varies with each system.**

10. After the installation completes, choose `OK`.

The machine reboots.

At this point the driver should be installed and ready for network configuration.

11. When the system reboots, run:

`/usr/sbin/lanscan`

The `ife` device should be listed. The device number is followed by an instance number (for example, `ife1`).

12. If lanscan indicates a MAC address of 0x000000000000, reboot the system by typing:

`reboot`

Configuring the Network Interface

Before the 4824 can communicate with other hosts on the network, its interface must be configured. The following procedure explains how to use the HP System Administration Manager (SAM) to configure the interface. For more detailed information, see Hewlett-Packard's *Installing and Administering LAN/9000*.

1. To invoke SAM, type the following at the HP-UX prompt:

   `sam`

2. To access the Networking and Communications window, double-click the **Networking and Communications** icon, and then double-click the **Network Interface Cards** icon.

3. To name the 4824 interface, do the following:

   a. Highlight the line with a **Card Name** of *ife <n>* (where *n* is the interface number) and a **Status** of *Not Configured.*

   b. From the **Actions** pull-down, select **Modify System Name . . .**

   c. When the Set/Modify System Name dialog appears, enter the name for the 4824 interface, a hostname unique in your system, in **System Name,** and click **OK.** (SAM uses this name to create an association between the interface and the IP address you supply in the next step, in your `/etc/hosts` file.)

4. To supply the Internet address and subnet mask for the 4824 interface, do the following:

a. Highlight the entry corresponding to the adapter you are configuring.

b. From the **Actions** pull-down, select **Configure . . .**

c. When the Configure LAN Card dialog appears, enter an **Internet Address** and a **Subnet Mask,** and click **OK.**

SAM configures the 4824 interface UP using the values you supplied. It also updates the `/etc/hosts` and `/etc/rc.config.d/netconf` files accordingly.

Verifying the Network Interface

If you used SAM, interface verification takes place at bootup. However, if you chose to add the interface IP address and netmask information to the `/etc/rc.config.d/netconf` file manually, you can verify that the 4824 interface is up and configured properly as follows:

1. Reboot the system by typing:

   ```
   reboot
   ```

2. Verify the interface name by typing

   ```
   netstat -rn
   ```

3. Use the `ifconfig` command to verify the interface IP address and netmask. For example, type:

   ```
   ifconfig ife1
   ```

```
ife1: flags=63<UP,BROADCAST,NOTRAILERS,RUNNING>
   inet 17.15.21.131 netmask ffffff00 broadcast 17.15.21.255
```

Figure 3-1. Sample `ifconfig` Output

4. To verify that the 4824 can communicate with other hosts, use the `ping (1M)` command. For example:

`ping 17.15.21.130`

```
64 bytes from 17.15.21.130: icmp_seq=1. time=3 ms
64 bytes from 17.15.21.130: icmp_seq=2. time=1 ms
64 bytes from 17.15.21.130: icmp_seq=3. time=1 ms
:
:
```

Figure 3-2. Sample `ping` Output

If the 4824 is unable to communicate with other hosts, see *Troubleshooting* on page 17 for suggestions.

Troubleshooting 4

This chapter explains how to isolate and solve 4824 problems.

Note **Make sure that the adapter is correctly installed and configured in a computer with the Extended Industry Standard Architecture (EISA) bus.**

Miscellaneous Checks

Check for specific hardware problems, such as broken traces or loose/broken solder connections.

If you have installed the adapter correctly and you still experience problems, check the software.

Check the length and rating of the UTP cable connection. Make sure the cable segment complies with 10Base-T or 100Base-TX recommendations. Maximum length for all types of cabling for this adapter is 100 meters.

Make sure that you have installed the correct driver for the operating system and product you are using.

LEDs

Note **For the LEDs to work, the adapter must be physically connected to the network and the network drivers must be loaded.**

Table 4-1. 4824 Adapter LEDs

LED	Description	On	Off
10 Mbps LNK (yellow)	Yellow LNK LED shows that the adapter is connected at 10 Mbps to a hub or switch and is receiving link pulses.	Good 10Base-T connection is established between adapter and hub.	No 10Base-T connection is established between adapter and hub.
10 Mbps ACT (yellow)	Yellow ACT LED flashes to show read/write activity on the network at 10 Mbps. Does not necessarily mean activity is on the adapter.	(Flashing) Read/write activity is occurring on the network at 10 Mbps.	Adapter is not transmitting or receiving data at 10 Mbps, or network may be idle.
100 Mbps LNK (green)	Green LNK LED shows that the adapter is connected at 100 Mbps to a hub or switch and is receiving link pulses.	Good 100Base-TX connection is established between adapter and hub.	No 100Base-TX connection is established between adapter and hub.

Table 4-1. 4824 Adapter LEDs (continued)

LED	Description	On	Off
100 Mbps ACT (green)	Green ACT LED flashes to show read/write activity on the network at 100 Mbps. Does not necessarily mean activity is on the adapter.	(Flashing) Read/write activity is occurring on the network at 100 Mbps.	Adapter is not transmitting or receiving data at 100 Mbps, or network may be idle.

If you experience any problems, first make sure that the appropriate driver is loaded, that the proper cable is connected to the adapter port, and that the hub complies with the adapter specifications (10 Mbps 10Base-T or 100 Mbps 100Base-TX). Then recheck the LED.

Problems and Possible Solutions

If you are experiencing this problem . . .	Try the following possible solution(s) . . .
The adapter doesn't connect to the network.	• Make sure the cable is installed properly. The network cable must be securely attached at all connections. If the cable is attached but the problem persists, try a different cable. • Check the LED lights on the adapter.

If you are experiencing this problem . . .	Try the following possible solution(s) . . .
LNK LED does not light.	• Make sure you've loaded the network drivers. • Check all connections at the adapter and the hub. • Try another port on the hub. • Make sure the adapter is configured for the correct speed, 10 or 100 Mbps. • Make sure the hub port is configured for the correct speed, 10 or 100 Mbps.
ACT LED does not light.	• Make sure you've loaded the network drivers. • Make sure the hub and network are operating. The network may be idle; try sending data from this workstation. • Try a different 4824.
Data is corrupted or sporadic at 100 Mbps.	• Make sure that you're using Category 5 cabling.
The adapter stopped working when another adapter was added to the computer.	• Make sure the cable is connected to the adapter. • Try reseating the adapter.
The adapter stopped working without apparent cause.	• Try reseating the adapter or try a different slot. • Try a different 4824.

4824 Specifications

A

This appendix lists the specifications for the 4824 adapter. It also contains pin assignments for the adapter's RJ-45 connector.

Adapter Card Specifications

Specifications for the 4824 are as follows:

SRAM Transmit/Receive Buffer

16 Kbytes

Interrupt Levels

3, 5, 7, 2/9, 10, 12, or 15

Network Interface

10 Mbps Ethernet 10Base-T	Ethernet IEEE 802.3 industry standard for a 10 Mbps baseband CSMA/CD local area network
100 Mbps Ethernet 100Base-TX	Ethernet IEEE 802.3u standard for a 100 Mbps baseband CSMA/CD local area network

Physical Dimensions

Length	7.275 inches
Height	5.125 inches

Environmental Operating Range

Operating temperature	0° to 55° C
Humidity	10 to 90% noncondensing
Altitude	To 3,000 meters (9,840 ft)

Power Requirements

Operating voltage	0.9 Watts @ +5 VDC

RJ-45 Connector Pin Assignments

The RJ-45 connector pin assignments are:

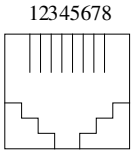

Pin #	Signal
1	TD+
2	TD-
3	RD+
4	not used
5	not used
6	RD-
7	not used
8	not used

Figure A-1. RJ-45 Pin Assignments

Note **The pin assignments are identical for 10Base-T and 100Base-T.**

Cabling Requirements

When connected to a 10Base-T network, the 4824 adapter operates in 10Base-T mode and supports standard 10Base-T cable topologies and types, including Category 3, 4, and 5 UTP for 10 Mbps.

When connected to a 100Base-TX network, the 4824 adapter operates in 100Base-TX mode and supports Category 5 UTP cable only.

The 4824 automatically senses the data rate present on the cable when the interface is configured UP. If no cable is present, the 4824 defaults to the 100 Mbit mode. If the cable data rate is changed, the interface must be configured DOWN and then UP to re-initiate the cable sensing operation.

In either case, the cable, quality, distance, and connectors must comply with the EIA/TIA 568 “Commercial Building Wiring Standard” and the Technical Services Bulletin TSB38 standards.

The maximum UTP cable distance is 100 meters at either speed.

100Base-T Technology Overview

B

Overview

100Base-T is the IEEE 802.3u standard providing a 100-megabits-per-second data rate.

100Base-T technology is based on the CSMA/CD signaling used for 10Base-T. This standard allows auto-negotiation of speed and duplex configurations.

100Base-TX

The 100Base-TX adapter is based on specifications in the ANSI TP-PMD standard. 100Base-TX operates at 100Mbps over two pairs of wires. One pair is for receiving data; the other is for transmitting. The wire has an approximate impedance of 100 Ω and is less than or equal to 100 meters in length.

The physical connection device (PHY) continuously monitors the receive data path for activity as a means of checking that the link is working correctly. This is done continuously during moderate to heavy traffic or even idle conditions on the network.

100Base-T4

The 100Base-T4 system operates over four pairs of wires. One pair is for transmitting data, one pair is for receiving data, and the remaining two pairs are bidirectional. So, for example, when data is being transmitted, the two bidirectional pairs and the transmit pair are all used for transmitting, while the receive

pair is used for sensing collisions. This makes it possible to provide Fast Ethernet signals over standard voice-grade Category 3 unshielded twisted-pair cable.

The 100Base-T4 media specification is designed to allow segments of up to 100 meters in length when using EIA/TIA Category 3, 4, or 5 unshielded twisted-pair cable.

The physical connection device (PHY) continuously monitors the receive data path for activity as a means of checking that the link is working correctly. When the network is idle, 100Base-T4 transceivers send link pulses over the segment to verify link integrity. These pulses are called Fast Link Pulses, and they are also used in the auto-negotiation mechanism,

4824.book : 100baset.app 27 Fri Dec 20 18:26:38 1996

which allows a multi-speed hub to detect the operation speed of an Ethernet device that is connected to it, and to adjust the speed of the hub ports accordingly.

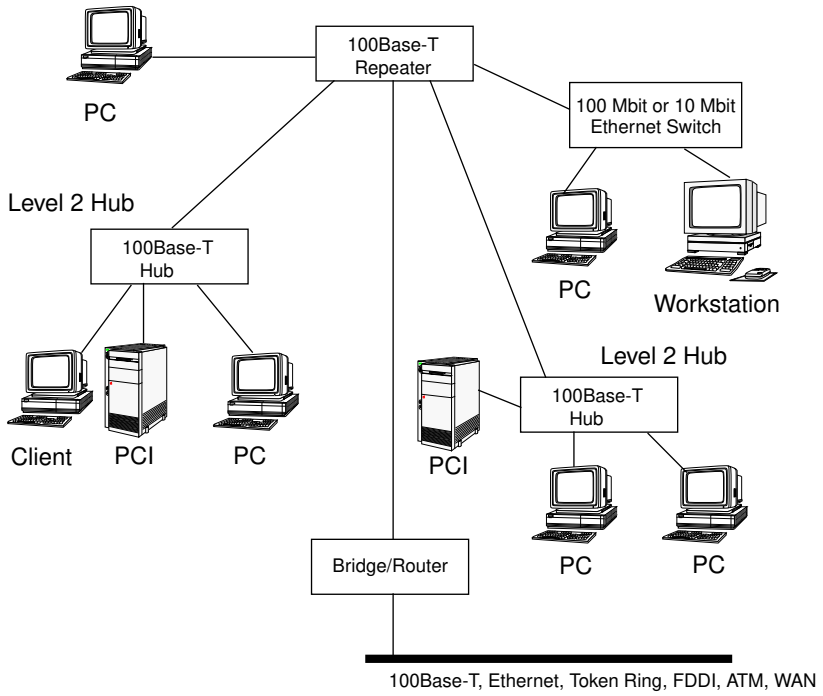

Figure B-1. Typical 100Base-T Network

Auto-Negotiation

Auto-negotiation is like a rotary switch that automatically switches to the correct technology (for example, 10Base-T or 100Base-TX Full Duplex). Once the highest-performance common mode is determined, auto-negotiation passes control of the cable to the appropriate technology and becomes

transparent until the connection is broken. Auto-negotiation leverages the proven link function of 10Base-T to provide robust operation over Category 3, 4, or 5 UTP.

The following lists define the priority hierarchy for resolving multiple common abilities. That is, if both devices support both 10Base-T and 100Base-TX, auto-negotiation at both ends will connect 100Base-TX instead of 10Base-T.

The priority hierarchy for TX mode is:

1. 100Base-TX Full Duplex
2. 100Base-TX
3. 10Base-T Full Duplex
4. 10Base-T

The priority hierarchy for T4 mode is:

1. 100Base-T4
2. 10Base-T Full Duplex
3. 10Base-T

To account for technologies that existed prior to auto-negotiation, auto-negotiation passes the signals present on the receiver to the 100Base-TX and 100Base-T4 Link Monitor functions.

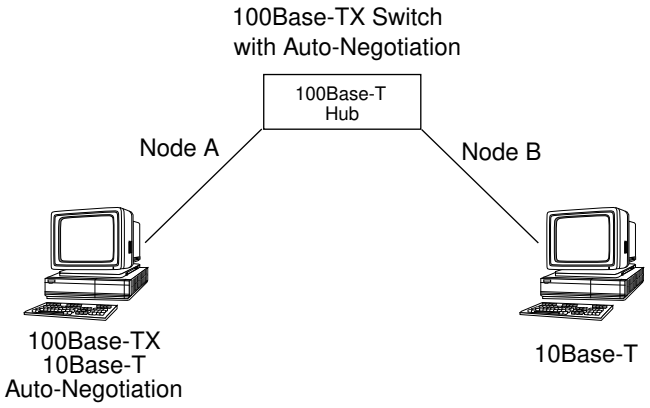

Figure B-2. Auto-Negotiation Basic Operation

World-Wide Web Resources

You can find information related to 100Base-T technology at the following web sites:

- `http://www.iol.unh.edu/consortiums/fe/fast_ethernet_consortium.html`
- `http://wwwhost.ots.utexas.edu/ethernet/100mbps.html`

Product Registration Card

Please take a minute to register your Interphase product. This will enable us to notify you about software updates and product enhancements.

Name _____
Title _____
Company Name _____
Company Address _____
City _____
State _____ Zip _____ Country _____
Province _____
Telephone ( ) _____
Fax ( ) _____
E-mail Address _____

Which product did you purchase? _____
Serial Number _____
Where did you purchase this product (company name)? _____
Date Purchased _____

Number of client nodes at this site: _____
Operating System(s) being used with this product:

❑ Solaris ❑ SunOS ❑ AIX ❑ NetWare
❑ HP-UX ❑ IRIX ❑ Mac OS ❑ Windows NT
❑ PC NFS ❑ DEC Ultrix ❑ Other _____

Operating System Version: _____
Network Protocol(s) in use:

❑ TCP/IP ❑ IPX ❑ AppleTalk ❑ Other _____

We welcome your comments, ideas, and suggestions. You can fax additional comments to 214/654-5500, or send them to intouch@iphase.com

_____
_____
_____
_____

If you are interested in receiving information on other products from Interphase, please check the appropriate boxes:

❑ ATM ❑ FDDI ❑ SCSI ❑ Fibre Channel ❑ 100 BaseT

If you are mailing this card from outside the United States, please add postage.

11/96

4824.book : smlnrmrg.doc 32 Fri Dec 20 18:26:38 1996

NO POSTAGE
NECESSARY
IF MAILED
IN THE
UNITED STATES

BUSINESS REPLY MAIL

FIRST-CLASS MAIL PERMIT NO. 5784 DALLAS TEXAS

POSTAGE WILL BE PAID BY ADDRESSEE

ATTN: WARRANTY DEPARTMENT
INTERPHASE CORPORATION
13800 SENLAC DR
DALLAS TX 75234-9600